INSTRUCTION SHEET 8184A - HYDRAULIC DEFLECTOR

INSTALLATION – 64": 2" X 6" Cylinder Kit 8155 required
– 76": 2" X 8" Cylinder Kit 8249 required

1. Shut engine off and remove the ignition key
2. **Figure 1:** Remove the retaining ring (items 1-4) of each cylinder pin (items 2-3) and remove the pins. Place the hydraulic ouputs in the position illustrated on figure 4 and attach the cylinder base (item 5) to the chute base and the sliding section to the deflector with the pins and retaining rings (items 1-2-3-4).
3. **Figure 2:** Remove the two plugs (items 1-2) from "C3" and "C4" hydraulic block ports.
4. **Figure 3:** Install the 90° 7/16" ORB M. X 7/16 JIC M. elbows (items 1-2) in the "C3" and "C4" hydraulic block ports by positioning the elbows in the illustrated direction.
5. **Figure 4:** Install the 90° 3/8 NPT M. X 1/4 NPT SWF elbows (items 1-2) in the cylinder ports by positioning the elbows in the illustrated direction. Add thread sealant on the elbow male section.

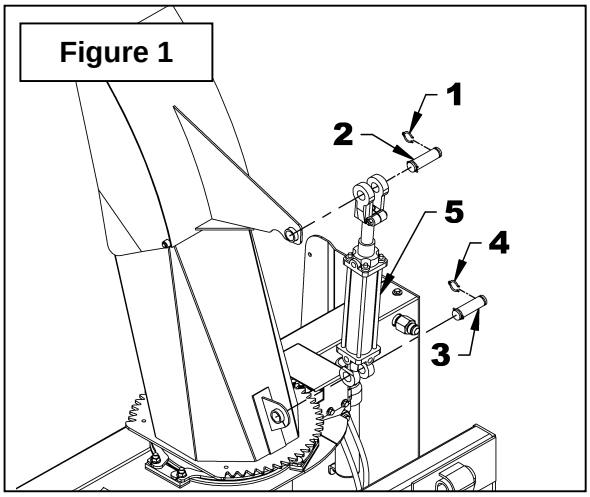

Figure 1

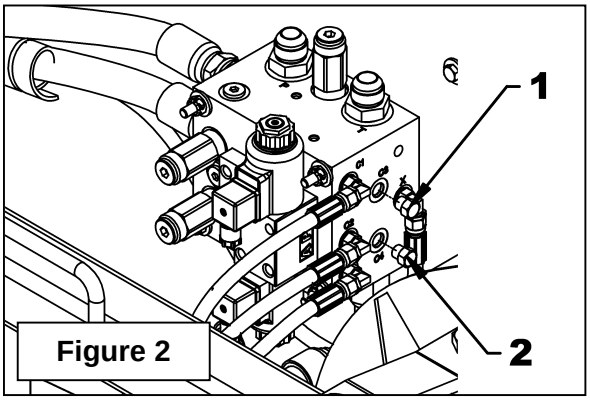

Figure 2

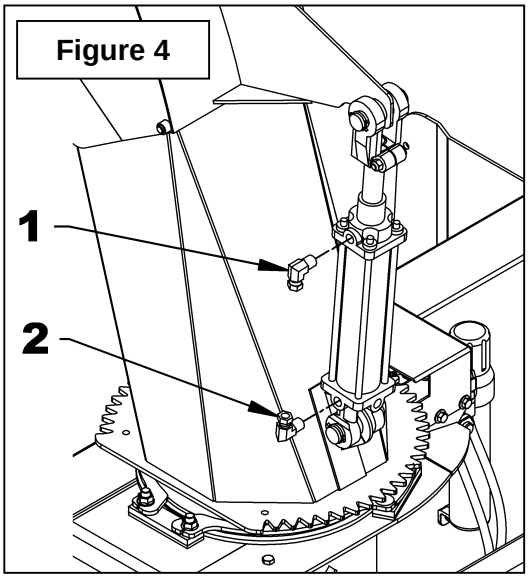

Figure 4

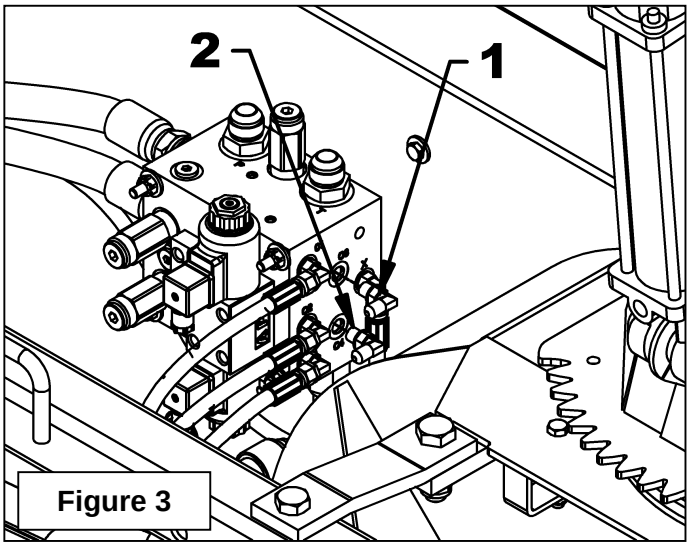

Figure 3

6. **Figure 5:** Attach the hose support (item 4) on the universal hitch with a 5/8" NC bolt, a lockwasher and nut (items 1-2-3, not provided).
7. **Figure 6:** Apply thread sealant on each hose male part (items 1-2) and screw in the cylinder 90° elbows (items 3-4).
8. **Figure 7:** Connect each hose female end (items 1-2) to hydraulic block 90° elbows (items 3-4) making sure to connect cylinder rod hose to the "C4" hydraulic block port.
9. **Figure 8:** Attach hoses to the hose support (item 1) with the clamp (item 2), the 3/8" x 1 1/4" lg bolt (item 3) and nylon insert locknut (item 4) by letting long enough hose to allow a complete rotation of the chute. Install the hose guard (item 5) as illustrated.

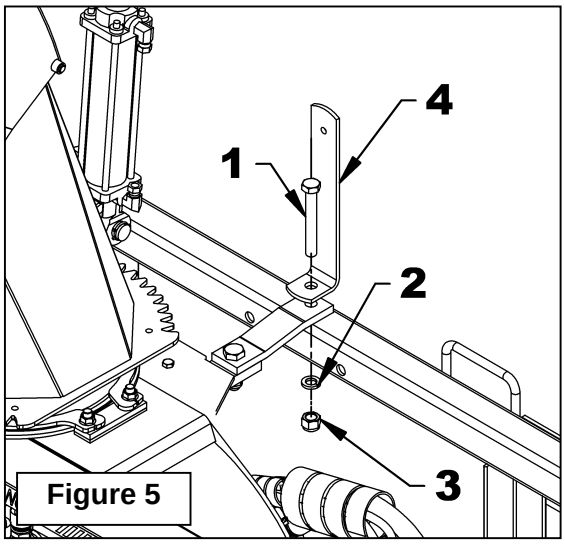

Figure 5

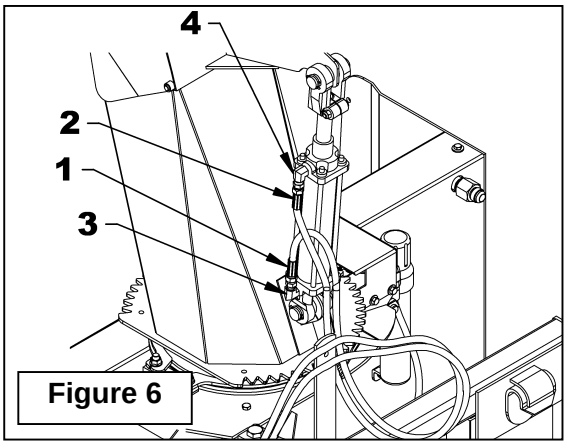

Figure 6

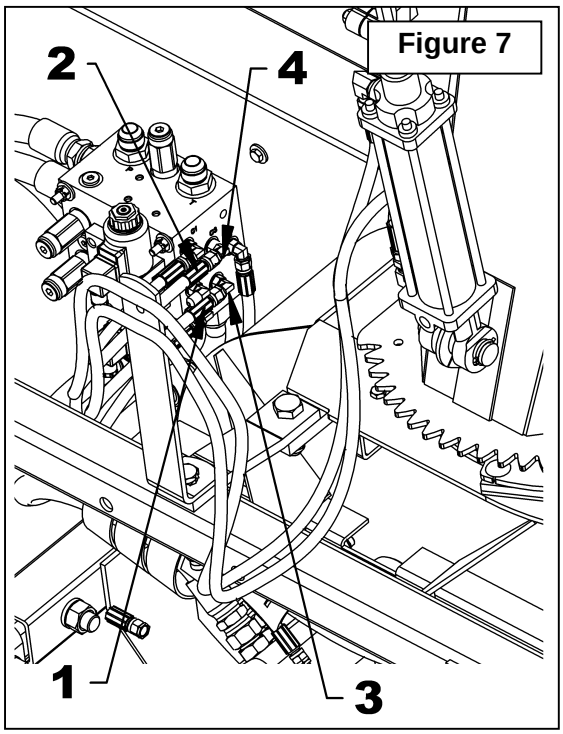

Figure 7

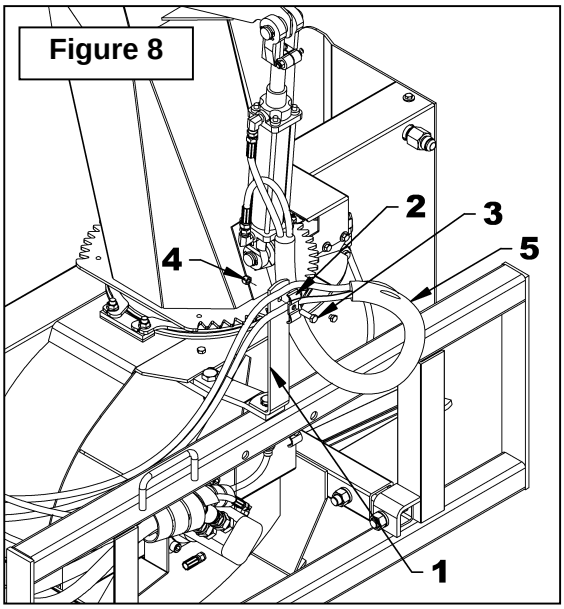

Figure 8

10. **Figure 9:** Remove the 10-24 X 7/8" allen socket head cap screws (item 1) and remove the plate (item 2). Make sure to remove the o-rings glued to the hydraulic block and clean well the four holes before valve installation.

11. **Figure 10:** Attach the electro-hydraulic valve (item 1) to the block with the four allen socket head cap screws (item 2) provided with the valve, making sure the valve o-rings are well placed on the valve.

IMPORTANT: Make sure the electric valve is installed <u>in the right direction</u>. It must have the "T" indication toward the overpressure valves (fig. 10 item 3).

12. **Figure 11:** Remove the DIN connectors (item 1) by removing the two screws (item 2).

13. **Figures 12a-12b:** Disassemble the DIN connectors (Fig. 12b, item 1) and connect the 160" harness wires as illustrated on Figure 12a. When connecting the wires, make sure to position the terminal board in the proper direction in the block so the wires point down once installed on the valve.

14. **Figure 11:** Reinstall the DIN connectors (items 3-4) on the valve making sure the white wire is in the upper connector and the blue wire is in the lower one and that the wires point down.

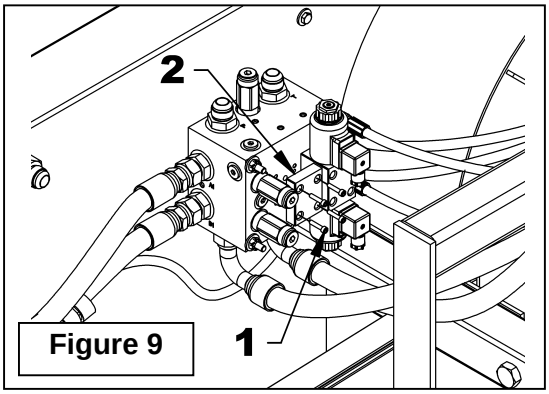

Figure 9

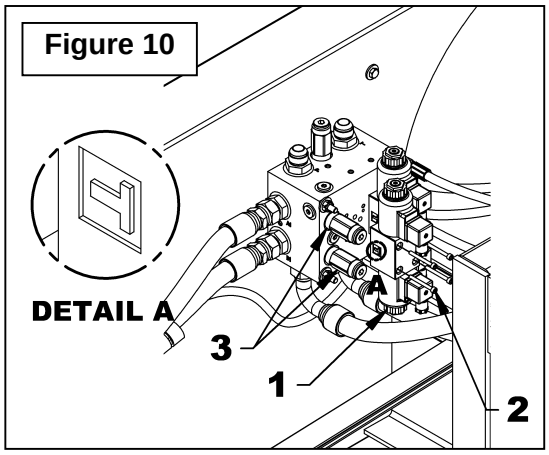

Figure 10

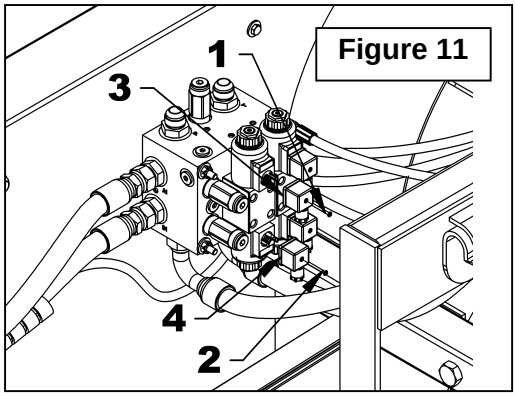

Figure 11

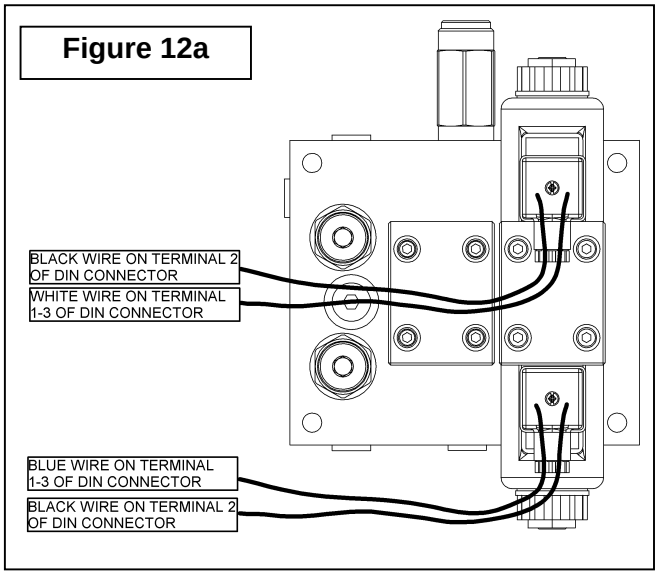

Figure 12a

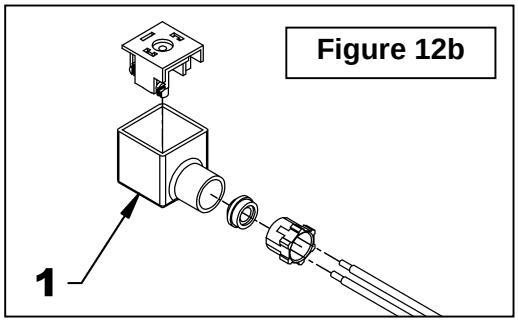

Figure 12b

15. Install the switch in one of the holes of the switch box and install the switch box on the machine where it can be easily accessed when operating the snowblower with the hardware provided. If bolts are not long enough, use longer ones by making sure to not touch the switches.

16. Take the 160" harness to the same place than the hydraulic hoses to the front of the tractor, near the tractor starter. Attach the harness with the nylon tie wrap and insert with the hoses in the 4" hoses guard and then in the 360" loom. If it is a deflector reinstallation, connect the male connector of the 160" harness to the tractor female connector.

17. Figure 13 : Install the male terminals on the stripped end of the white wires and the black ground wire. Connect those terminals to the three cavity female connector making sure to install the black wire in the "A" cavity.

18. Attach the black wire to an appropriate ground on the tractor frame.

19. Connect the fuse wire to the tractor contact switch wire with the connector tap.

20. Connect the male connector to the female connector.

21. Figure 14: Connect the fuse wire to the 1 blade (item 1) - in the center, one white wire to the item 2 blade and the other to the item 3 blade of the switch.

NOTE: If the deflector movement is not corresponding to the switch illustration, reverse the white wires.

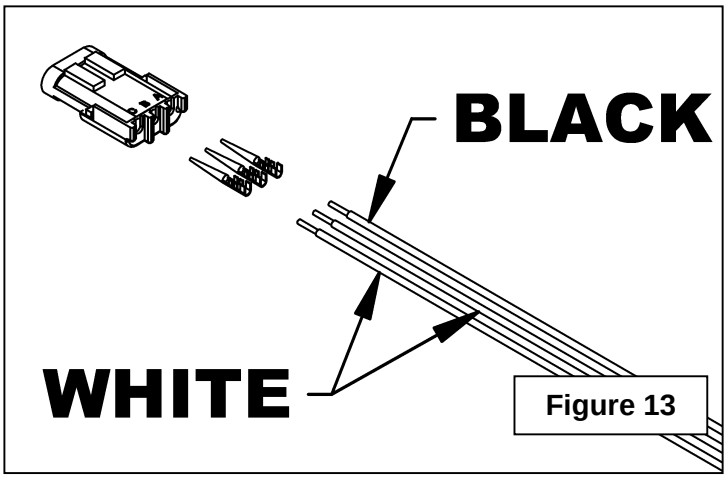

Figure 13

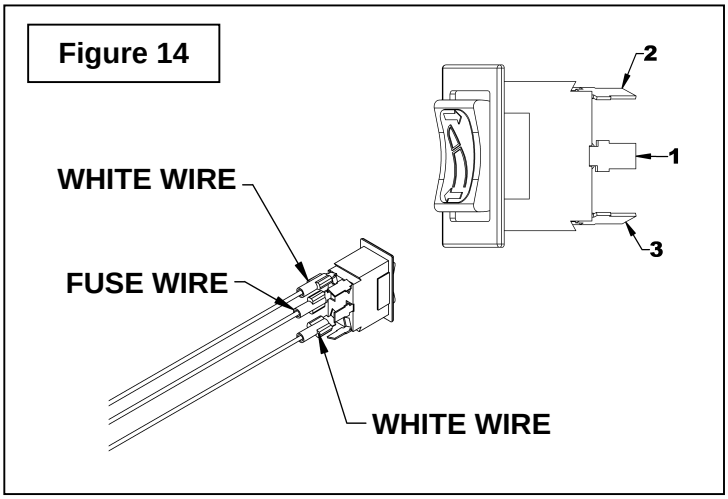

Figure 14

HYDRAULIC DEFLECTOR - 8184A

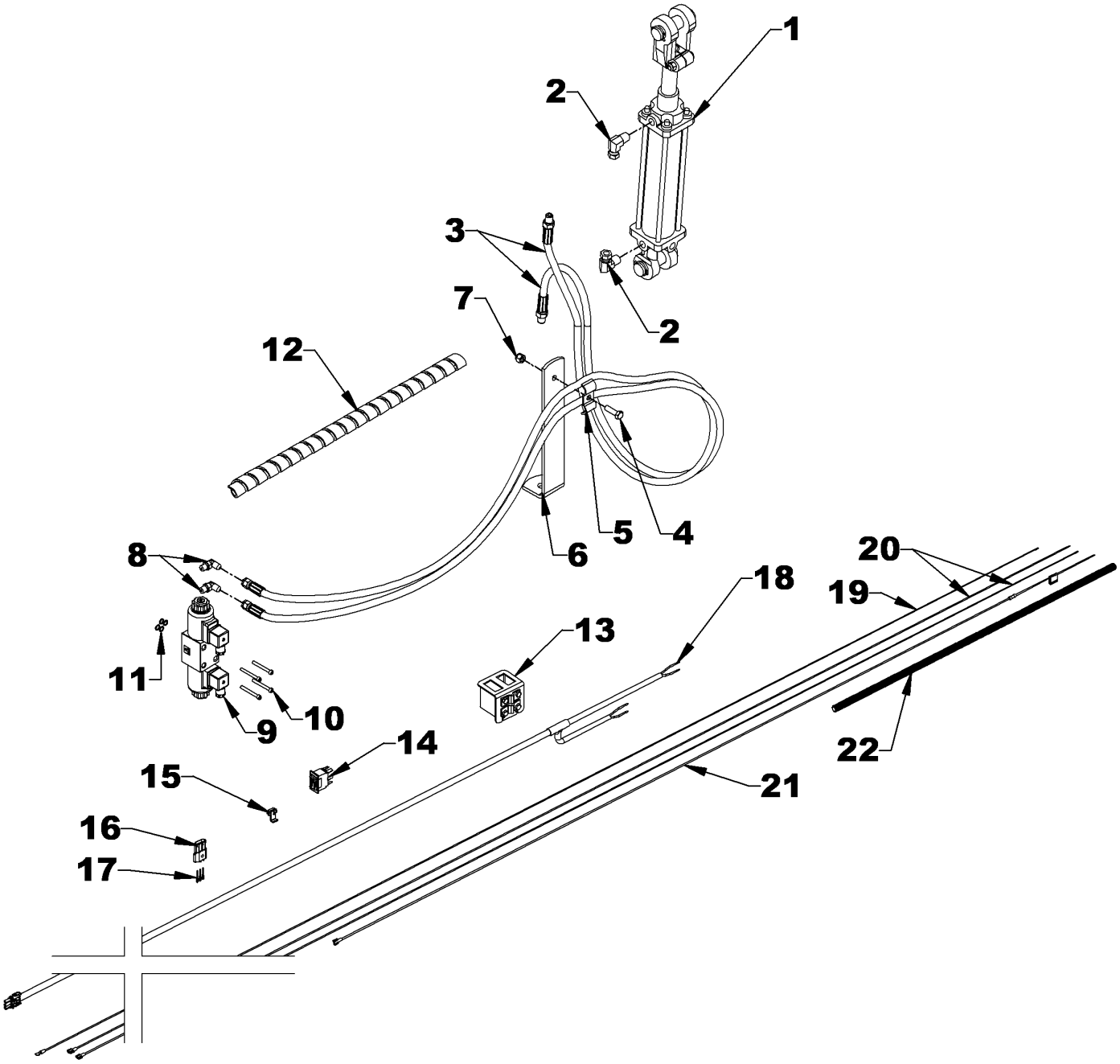

PARTS

REF.	DESCRIPTION	QTY	PART #
	Hydraulic Cylinder 8249 for H76A & H84A		
1	Cylinder 2" x 8"	1	3900022
	Seal kit - cylinder 3900022 (not shown)		3900205
	Hydraulic cylinder 8155 for H64A		
1	Cylinder 2" x 6"	1	3900002
	Seal kit - cylinder 3900002 (not shown)		2600047
2	Elbow 90° 3/8" NPT M x 1/4" NPT SWF	2	654438
3	Hose 75" lg - 1/4"NPT SM x 7/16" JIC SWF	2	3700077
4	Bolt hex. ø3/8"NC x 1 1/4" Gr.5 PTD	1	0100039
5	Hose clamp 1/4"	1	666583
6	Hose support	1	669275
7	Nylon insert locknut ø3/8"NC PTD	1	1000006
8	Elbow 90º 7/16 ORB M X 7/16 JIC M	2	2600065
9	Electro-hydraulic valve	1	3900027
10	Allen socket head cap screw 10-24 NC x 1 3/4" gr.5, black	4	0800018
11	O-ring 0.07" x 3/8" x 1/2" ext.	4	3900462
12	Hose guard 24" lg.	1	669152
13	Switch box	1	669281
14	Switch with rotation decal	1	669255
15	Connector tap	1	656665
16	Female connector with three cavity	1	4000066
17	Male terminal	3	663282
18	Electric harness 160"	1	4000078
19	Negative wire (black) 200"	1	669314
20	Positive wire (white) 200"	2	669313
21	Wire with fuse	1	666065
22	Loom 3/8" x 360"	1	669315